Centre Number	Candidate Number	Name

CAMBRIDGE INTERNATIONAL EXAMINATIONS
General Certificate of Education Advanced Level

PHYSICS **9702/04**

Paper 4

October/November 2003

1 hour

Candidates answer on the Question Paper.
No Additional Materials are required.

READ THESE INSTRUCTIONS FIRST

Write your Centre number, candidate number and name on all the work you hand in.
Write in dark blue or black pen in the spaces provided on the Question Paper.
You may use a soft pencil for any diagrams, graphs or rough working.
Do not use staples, paper clips, highlighters, glue or correction fluid.

Answer **all** questions.
The number of marks is given in brackets [ ] at the end of each question or part question.
You may lose marks if you do not show your working or if you do not use appropriate units.

If you have been given a label, look at the details. If any details are incorrect or missing, please fill in your correct details in the space given at the top of this page.

Stick your personal label here, if provided.

For Examiner's Use	
1	
2	
3	
4	
5	
6	
Total	

This document consists of **14** printed pages and **2** blank pages.

© UCLES 2003
UNIVERSITY of CAMBRIDGE Local Examinations Syndicate
[Turn over

Data

speed of light in free space,	$c = 3.00 \times 10^{8}\ \text{m s}^{-1}$
permeability of free space,	$\mu_0 = 4\pi \times 10^{-7}\ \text{H m}^{-1}$
permittivity of free space,	$\epsilon_0 = 8.85 \times 10^{-12}\ \text{F m}^{-1}$
elementary charge,	$e = 1.60 \times 10^{-19}\ \text{C}$
the Planck constant,	$h = 6.63 \times 10^{-34}\ \text{J s}$
unified atomic mass constant,	$u = 1.66 \times 10^{-27}\ \text{kg}$
rest mass of electron,	$m_e = 9.11 \times 10^{-31}\ \text{kg}$
rest mass of proton,	$m_p = 1.67 \times 10^{-27}\ \text{kg}$
molar gas constant,	$R = 8.31\ \text{J K}^{-1}\ \text{mol}^{-1}$
the Avogadro constant,	$N_A = 6.02 \times 10^{23}\ \text{mol}^{-1}$
the Boltzmann constant,	$k = 1.38 \times 10^{-23}\ \text{J K}^{-1}$
gravitational constant,	$G = 6.67 \times 10^{-11}\ \text{N m}^2\ \text{kg}^{-2}$
acceleration of free fall,	$g = 9.81\ \text{m s}^{-2}$

Formulae

uniformly accelerated motion, $s = ut + \frac{1}{2}at^2$
$v^2 = u^2 + 2as$

work done on/by a gas, $W = p\Delta V$

gravitational potential, $\phi = -\frac{Gm}{r}$

simple harmonic motion, $a = -\omega^2 x$

velocity of particle in s.h.m., $v = v_0 \cos \omega t$
$v = \pm \omega \sqrt{(x_0^2 - x^2)}$

resistors in series, $R = R_1 + R_2 + \ldots$

resistors in parallel, $1/R = 1/R_1 + 1/R_2 + \ldots$

electric potential, $V = \frac{Q}{}$

capacitors in series, $1/C = 1/C_1 + 1/C_2 + \ldots$

capacitors in parallel, $C = C_1 + C_2 + \ldots$

energy of charged capacitor, $W = \frac{1}{2}QV$

alternating current/voltage, $x = x_0 \sin \omega t$

hydrostatic pressure, $p = \rho gh$

pressure of an ideal gas, $p = \frac{1}{3}\frac{Nm}{V}\langle c^2 \rangle$

radioactive decay, $x = x_0 \exp(-\lambda t)$

decay constant, $\lambda = \frac{0.693}{t_{\frac{1}{2}}}$

critical density of matter in the Universe, $\rho_0 = 3H_0^2$

equation of continuity, $Av =$ constant

Bernoulli equation (simplified), $p_1 + \frac{1}{2}\rho v_1^2 = p_2 + \frac{1}{2}\rho v_2^2$

Stokes' law, $F = Ar\eta v$

Reynolds' number, $R_e = \rho v$

drag force in turbulent flow, $F = Br^2\rho v^2$

[Turn over

Answer **all** the questions in the spaces provided.

1 **(a)** **(i)** On Fig. 1.1, draw lines to represent the gravitational field outside an isolated uniform sphere.

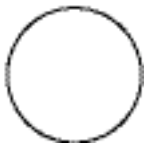

Fig. 1.1

(ii) A second sphere has the same mass but a smaller radius. Suggest what difference, if any, there is between the patterns of field lines for the two spheres.

.....

.....

[3]

(b) The Earth may be considered to be a uniform sphere of radius 6380 km with its mass of 5.98×10^{24} kg concentrated at its centre, as illustrated in Fig. 1.2.

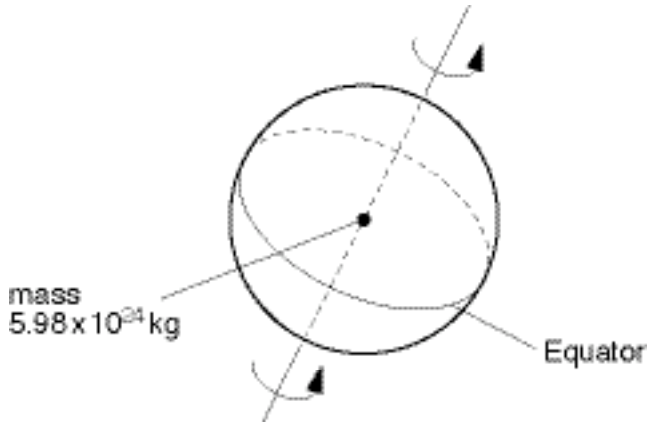

Fig. 1.2

A mass of 1.00 kg on the Equator rotates about the axis of the Earth with a period of 1.00 day (8.64×10^4 s).

For Examiner's Use

Calculate, to three significant figures,

(i) the gravitational force F_G of attraction between the mass and the Earth,

F_G = ... N

(ii) the centripetal force F_C on the 1.00 kg mass,

F_C = ... N

(iii) the difference in magnitude of the forces.

difference = ... N
[6]

(c) By reference to your answers in **(b)**, suggest, with a reason, a value for the acceleration of free fall at the Equator.

.....

.....

..... [2]

[Turn over

2 **(a)** The defining equation of simple harmonic motion is

$$a = -\omega^2 x.$$

(i) Identify the symbols in the equation.

a .....

ω .....

x .....

(ii) State the significance of the negative (–) sign in the equation.

.....

.....

[3]

(b) A frictionless trolley of mass m is held on a horizontal surface by means of two similar springs, each of spring constant k. The springs are attached to fixed points as illustrated in Fig. 2.1.

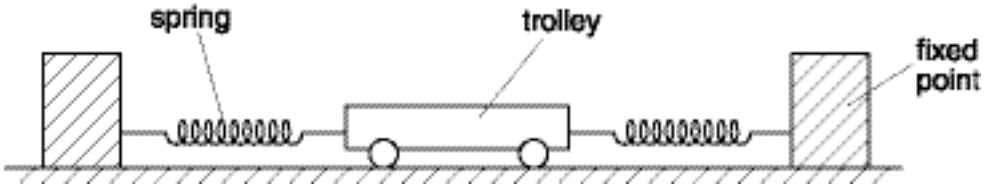

Fig. 2.1

When the trolley is in equilibrium, the extension of each spring is e.

The trolley is then displaced a small distance x to the right along the axis of the springs. Both springs remain extended.

(i) Show that the magnitude F of the restoring force acting on the trolley is given by

$$F = 2kx.$$

[2]

(ii) The trolley is then released. Show that the acceleration a of the trolley is given by

$$a = \frac{-2kx}{m}.$$

[2]

(iii) The mass m of the trolley is 900 g and the spring constant k is 120 N m^{-1}. By comparing your answer to **(a)(i)** and the equation in **(b)(ii)**, determine the frequency of oscillation of the trolley.

frequency = …….…….. Hz [3]

(c) Suggest why the trolley in **(b)** provides a simple model for the motion of an atom in a crystal.

.....

.....

..... [2]

3 The volume of some air, assumed to be an ideal gas, in the cylinder of a car engine is 540 cm^3 at a pressure of 1.1×10^5 Pa and a temperature of 27 °C. The air is suddenly compressed, so that no thermal energy enters or leaves the gas, to a volume of 30 cm^3. The pressure rises to 6.5×10^6 Pa.

(a) Determine the temperature of the gas after the compression.

temperature = ... K [3]

(b) (i) State and explain the first law of thermodynamics.

.....

.....

.....

..... [2]

(ii) Use the law to explain why the temperature of the air changed during the compression.

.....

.....

.....

.....

.....[4]

4 The rectified output of a sinusoidal signal generator is connected across a resistor **R** of resistance 1.5 k, as shown in Fig. 4.1.



Fig. 4.1

The variation with time *t* of the potential difference *V* across **R** is shown in Fig. 4.2.

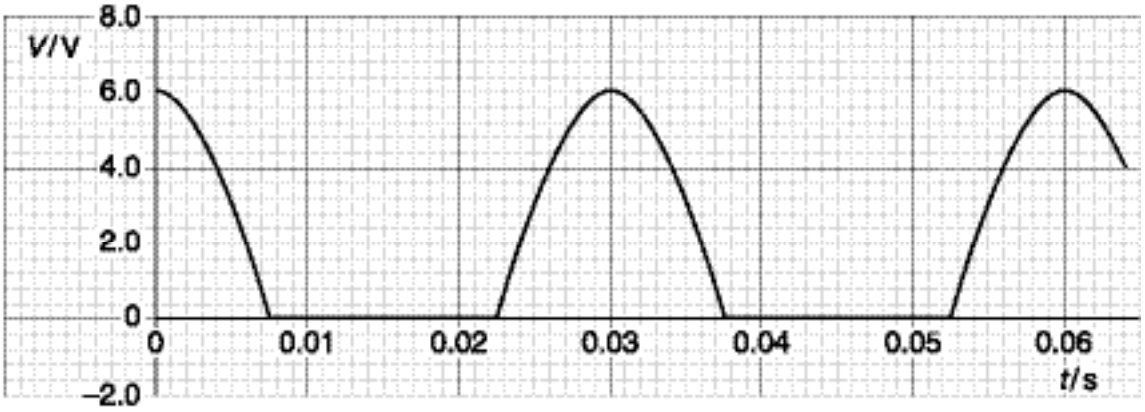

Fig. 4.2

(a) State how the rectification shown in Fig. 4.2 may be achieved.

.....

..... [2]

(b) A capacitor is now connected in parallel with the resistor **R**. The resulting variation with time *t* of the potential difference *V* across **R** is shown in Fig. 4.3.

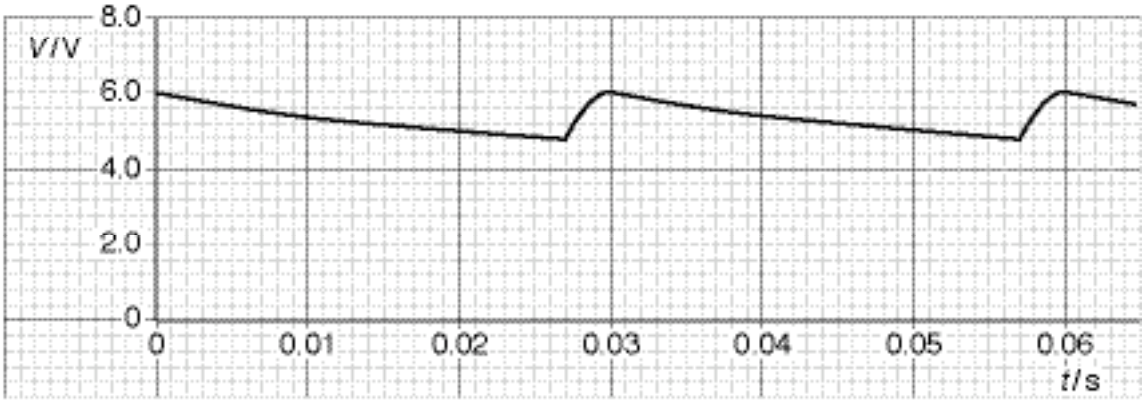

Fig. 4.3

(i) Using Fig. 4.3, determine

1. the mean potential difference across the resistor **R**,

potential difference = ... V

2. the mean current in the resistor,

mean current = ... A

3. the time in each cycle during which the capacitor discharges through the resistor.

time = ... s

[4]

(ii) Using your answers in **(i)**, calculate

1. the charge passing through the resistor during one discharge of the capacitor,

charge = ... C

2. the capacitance of the capacitor.

capacitance = ... F
[4]

(c) A second capacitor is now connected in parallel with the resistor **R** and the first capacitor. On Fig. 4.3, draw a line to show the variation with time *t* of the potential difference *V* across the resistor. [1]

[Turn over

5 **(a)** Define the tesla, the unit of magnetic flux density.

.....

.....

..... [2]

(b) The aluminium frame ABCD of a window measures 85 cm × 60 cm, as illustrated in Fig. 5.1.

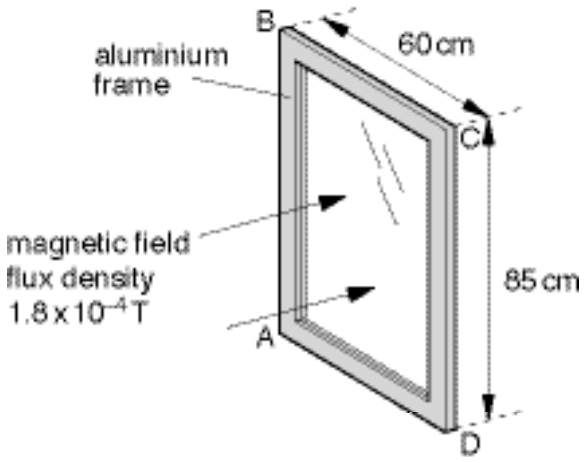

Fig. 5.1

The window is hinged along the edge AB.

When the window is closed, the horizontal component of the Earth's magnetic field, of flux density 1.8×10^{-4} T, is normal to the window.

(i) Calculate the magnetic flux through the window.

magnetic flux = ... Wb [2]

(ii) The window is now opened in a time of 0.20 s. When open, the plane of the window is parallel to the Earth's magnetic field.

For the opening of the window,

1. state the change in flux through the window,

change = ... Wb

2. calculate the average e.m.f. induced in side CD of the frame.

e.m.f. = ... V
[3]

(iii) Suggest, with a reason, whether the e.m.f. calculated in **(ii)2** gives rise to a current in the frame ABCD.

.....

..... [1]

6 **(a)** Explain what is meant by a *photon* of electromagnetic radiation.

.....

.....

..... [2]

(b) The photoelectric effect provides evidence for the particulate nature of electromagnetic radiation. State three experimental observations that support this conclusion.

1. .....

.....

2. .....

.....

3. .....

..... [3]

(c) Electromagnetic radiation of wavelength λ and intensity I, when incident on a metal surface, causes n electrons to be ejected per unit time. The maximum kinetic energy of the electrons is E_{max}.

State and explain the effect, if any, on n and E_{max} when

(i) the intensity is reduced to $\frac{1}{2} I$ but the wavelength λ is unchanged,

.....

.....

.....

(ii) the wavelength λ is reduced but the intensity I is not changed.

.....

.....

.....
[4]

BLANK PAGE

BLANK PAGE